IRoC-U

ISRO Robotics Challenge - URSC

Let's build a space robot

By

Manik

10624

Shri Guru Gobind Singhji Institute Of Engineering And Technology

CONTENTS

1. Chassis Testing
2. Rocker Bogie Mechanism
3. Advantages of Rocker Bogie Mechanism
4. Pick & Place Mechanism
5. Efficient Object Handling with Dual Grippers
6. Technical Realization
7. ROS2 Integration and Path Planning for Rover
8. Nav2
9. Integration of OpenCV and MoveIt within ROS2 for Pick and Place
10. OpenCV in Pick and Place
11. ROS2 and Pick and Place
12. Planning Precision with Visual Feedback

Chassis Testing

(We tried many mechanisms below are some highlighted examples)

Durability and Structure

The chassis, typically composed of a metal frame supported on springs, undergoes rigorous testing to evaluate its ability to withstand the harsh conditions of extraterrestrial terrain or challenging competition environments.

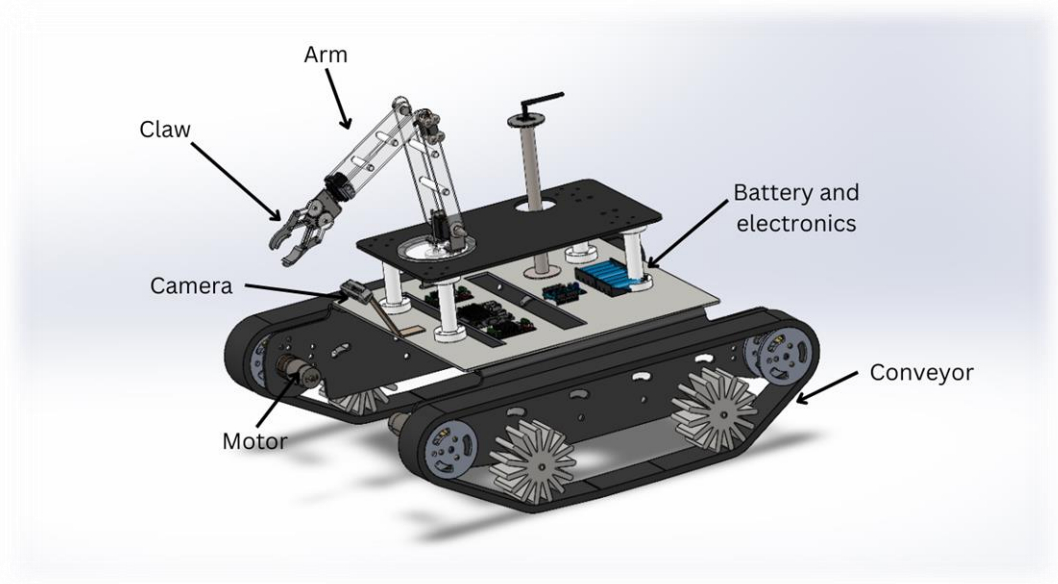

Weight-bearing Capability

It is essential to test the chassis' ability to support the weight of the entire rover structure, including its payload and scientific instruments.

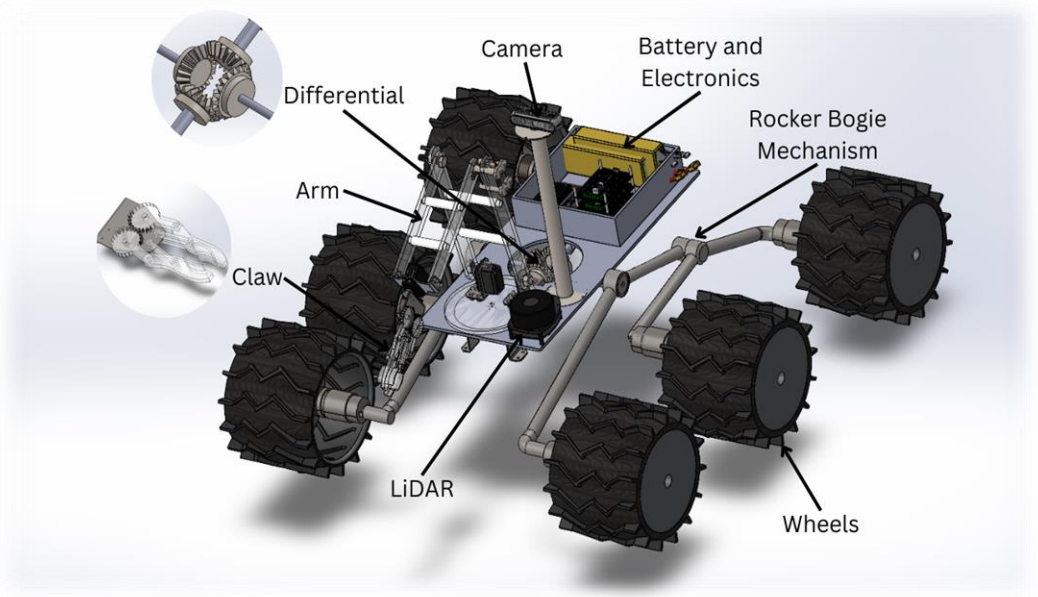

Rocker Bogie Mechanism

(This is the Finalized Mechanism)

The Rocker Bogie mechanism is an advanced roving mechanism that offers remarkable stability and efficiency when traversing various terrains. It is equipped with six wheels, three on each side, and a differential system to enhance the stability of the main chassis.

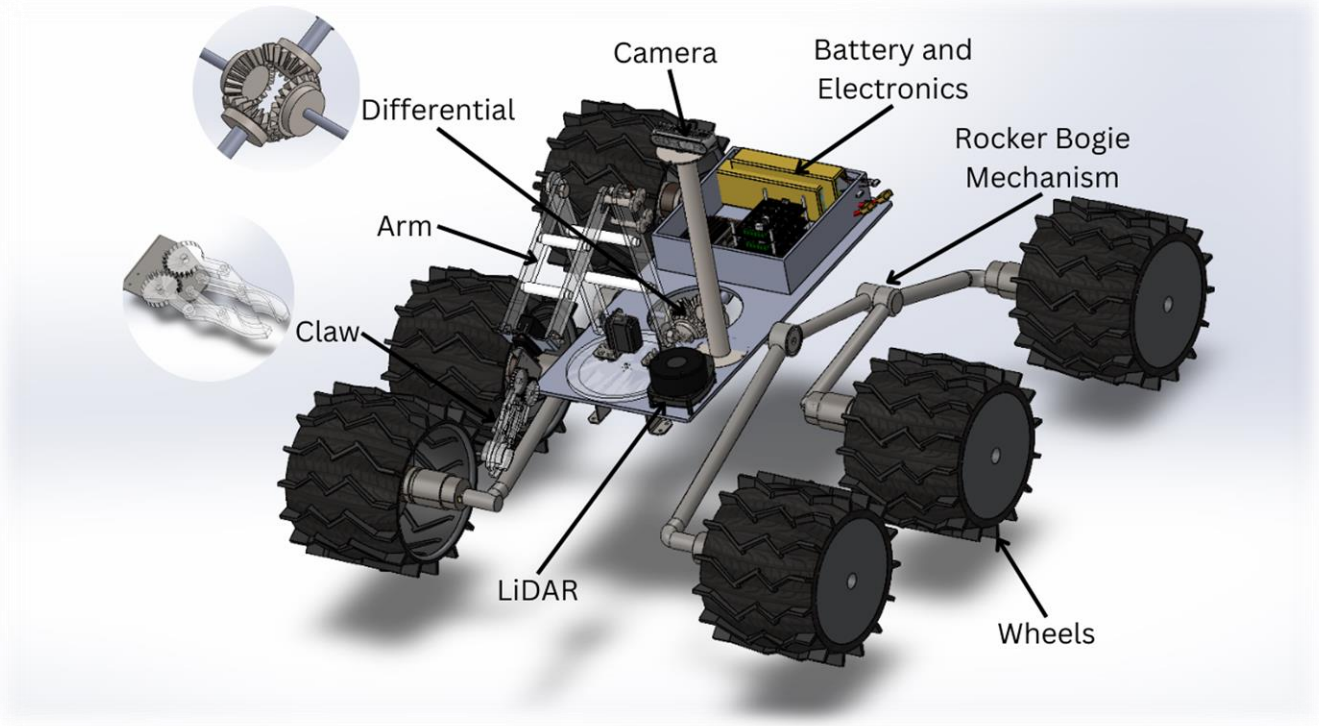

Sub-Drives and Sub-Integration of Rocker Bogie

Bogie Segmentation

The individual segments of the Rocker Bogie are interconnected with a free pivot point, resembling a suspension system that greatly contributes to the mechanism's stability and flexibility.

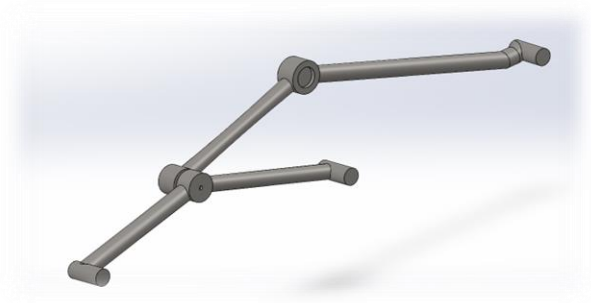

Differential (Four-Geared System)

The differential, operating as a four-geared system, ensures stability by effectively distributing movement from one bogie segment to another, thereby increasing ground contact of the wheels.

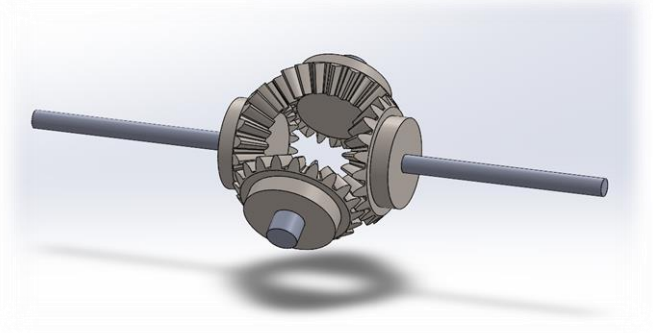

Swerve Drive

The swerve drive component allows the wheels to move in all axes, providing unparalleled maneuverability, especially in navigating through tight spaces and around obstacles.

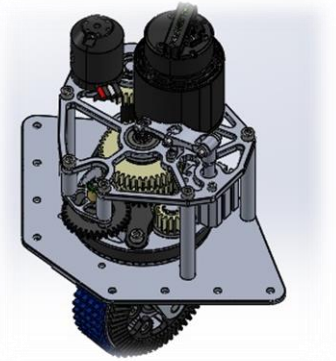

Advantages of Rocker Bogie Mechanism

Stability

The six-wheel design, coupled with the differential system, ensures unparalleled stability, even on uneven terrains, effectively reducing the risk of tipping over.

Mobility

The swerve drive empowers the mechanism with enhanced mobility, allowing free movement in all axes, making it adept at navigating tricky paths and obstacles.

Shock Absorption

The interconnected segments with free pivot points act as a robust suspension system, absorbing shocks from the terrain, providing a smoother ride.

Efficiency

The Rocker Bogie mechanism's design optimizes energy usage, allowing for smooth movement with minimal resistance.

Pick & Place Mechanism

Four Degrees of Freedom

The robotic arm's four degrees of freedom enable it to move around specific axes and directions, simplifying its operation while efficiently handling diverse tasks.

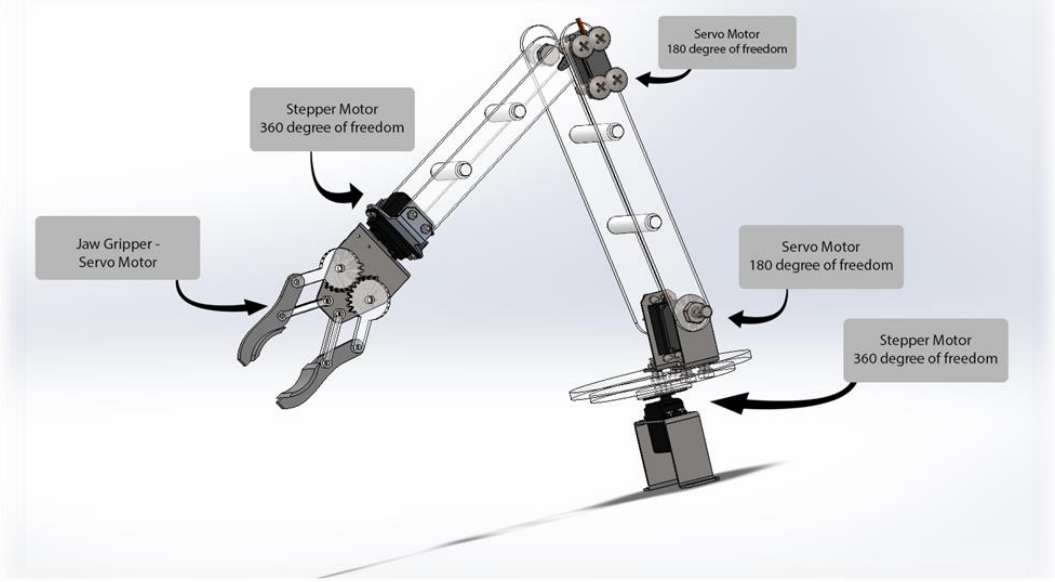

Precise Control

Utilization of different types of motors for specific joints, including stepper and servo motors, ensures precise control over the arm's movements, vital for maintaining accuracy and reliability during operations.

Versatile Gripper

The gripper's design, with two interlocked gears moving in opposite directions, provides adaptability in securely handling objects of various shapes and sizes, enhancing its utility in different scenarios.

Efficient Object Handling with Dual Grippers

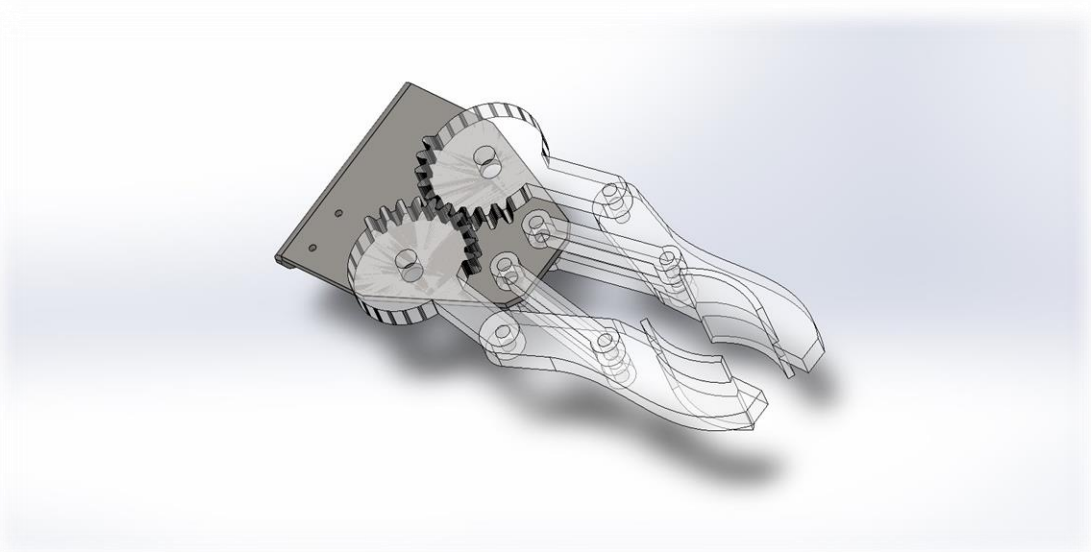

Enhanced Efficiency

The presence of dual grippers allows the mechanism to handle two objects simultaneously, enhancing operational efficiency and productivity.

Stability and Flexibility

Dual grippers can securely handle a single object by utilizing both grippers for added stability, showcasing the mechanism's versatility in various handling scenarios.

Technical Realization

1

Navigation Task

Dependent on NAV2 and OpenCV, influential for object detection and feature-based map traversal with point cloud utilization.

2

Pick and Place Task

Utilizes MoveIt for axis controlling and motor speed maintenance during operation for precise pick and place tasks.

ROS2 Integration and Path Planning for Rover

1

Image Acquisition

Capturing high-resolution images of items or objects using cameras or sensors.

2

Recognition and Measurement

Precisely identify and measure objects within its field of view.

3

Motion Planning and Execution

Subscribes to the object information published by the OpenCV node, incorporating visual feedback into the planning process.

4

Execution of Planned Motion

Execution of the planned pick and place actions, optimizing the performance of the robot's joints and end-effector.

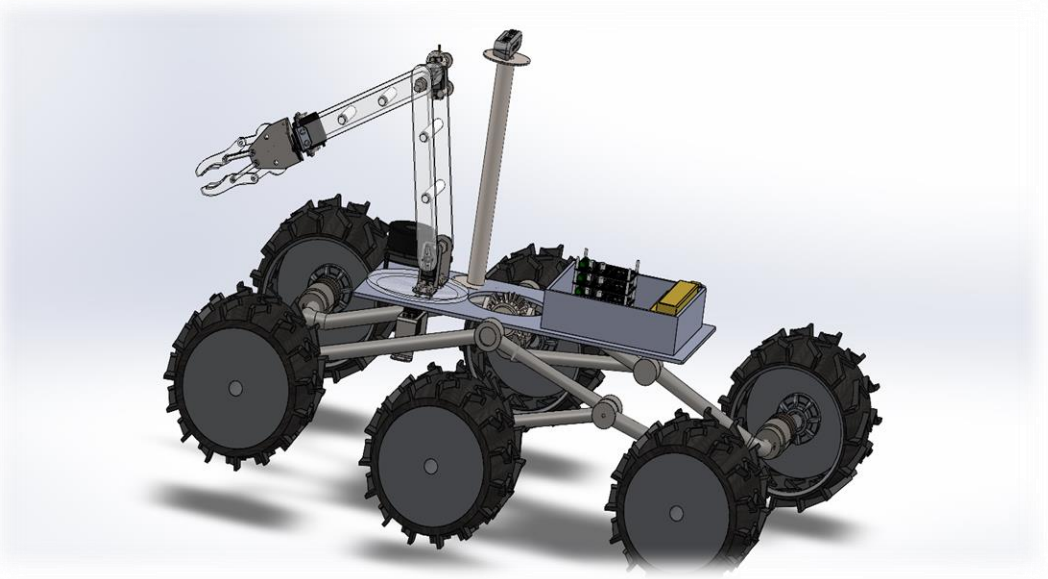

Nav2

Key Features

1

Adaptability

Adjusts to various terrains and environmental conditions

2

Redundancy

Multiple backup systems for reliable navigation in challenging situations

3

Efficiency

Optimizes energy consumption for prolonged exploration missions

Enhanced

1

Precise Mapping

Accurate mapping of the rover's surroundings for safe navigation

2

Advanced Sensors

Utilizes state-of-the-art sensors for real-time environment analysis

3

Intelligent Software

Smart algorithms for autonomous decision-making during exploration

Integration of OpenCV and MoveIt within ROS2 for Pick and Place

- **Integration of OpenCV and MoveIt within the ROS2 framework** is a critical component of pick and place systems.

- **OpenCV** plays a pivotal role in visual perception, focusing on:
  - Object detection
  - Recognition
  - Measurement

- OpenCV's use of **RGB and HSV colour spaces** enables accurate colour detection of objects.
- **MoveIt** is instrumental in planning and executing pick and place actions. It relies on:
  - A detailed robot description
  - Typically represented using the **Unified Robot Description Format (URDF)**
  - Includes information about joint limits, types, and the physical structure of the robot.
- This integration forms a seamless system that uses visual feedback through OpenCV for motion planning and execution.

OpenCV in Pick and Place

Accurate Measurement

Utilizes RGB and HSV color spaces, facilitating accurate color detection of objects and enabling precision in pick and place actions.

Visual Perception

OpenCV processes camera input, performs object detection, and publishes relevant information such as object position, color, and diameter on specific ROS topics.

ROS2 and Pick and Place

1. **ROS2 Framework**

   The critical framework that enables seamless integration of OpenCV and MoveIt for pick and place applications.

2. **Seamless Integration**

   Establishes a dedicated node within ROS2, ensuring the smooth transfer of information between the visual perception and motion planning and execution components.

3. **Unified Robot Description Format**

   Provides detailed robot description, including joint limits, types, and the physical structure, crucial for precise pick and place actions.

Utilizing Object Information

Visual Feedback in Planning

MoveIt node subscribes to the object information published by the OpenCV node, incorporating visual feedback into the planning process.

Enhanced Motion Planning

Integrates visual feedback to ensure precision and accuracy in the motion planning and execution tasks.

MoveIt: Motion Planning and Execution

Motion Planning

MoveIt generates a detailed trajectory specifying how the robot's joints should move over time to execute the planned motion with precision.

Integration with ROS2

MoveIt is tightly integrated with ROS2, managing the motion planning and execution tasks seamlessly.

Robot Kinematics and Dynamics

Robot's Kinematics

MoveIt relies on a detailed description of the robot's kinematics for precise motion planning and execution.

Unified Robot Description Format (URDF)

This model includes information about joint limits, types, and the physical structure of the robot, enabling accurate pick and place actions.

Object Detection and Recognition

Object Detection

OpenCV's dedicated node in ROS2 processes camera input, detecting objects accurately for pick and place actions.

Recognition of Object Position

Publishing relevant information such as object position, color, and diameter on specific ROS topics for precise pick and place actions.